1213 US Route 302-Berlin
Barre, VT 05641
(802)223-5583 (800)479-3636
Fax: (802)229-6130
info@builderspecialties.com
www.builderspecialties.com

STOCK APRON SINKS

Prices are subject to change without notice. Effective 6/11/2025

Item MJ3318A $450

*Available inventory only

Apron Kitchen Sink
Double Bowl White
Embedded Type
Size:33-1/4"x18"x10''
*Reversible - Fluted (as shown) or Two Horizontal Lines

$420

Item AB4118

Apron Kitchen Sink
Single Bowl White
Embedded Type
Size:30"x18"x10''

1213 US Route 302-Berlin
Barre, VT 05641
(802)223-5583 (800)479-3636
Fax: (802)229-6130
info@builderspecialties.com
www.builderspecialties.com

STOCK STAINLESS APRON SINKS

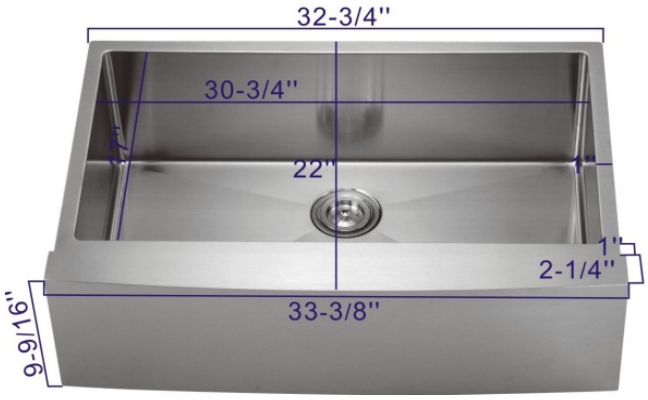

MODEL AR332210 $390

R0 Single Bowl Farmhouse Sink
(Straight Corners)
SUS304 18 Ga (1.2mm) 17KG
Mute Anti-Condensation
Seamless Connection
Out Size: 33 3/8" x 22" x 10"
Bowl Size: 30 3/4" x 17" x 10"

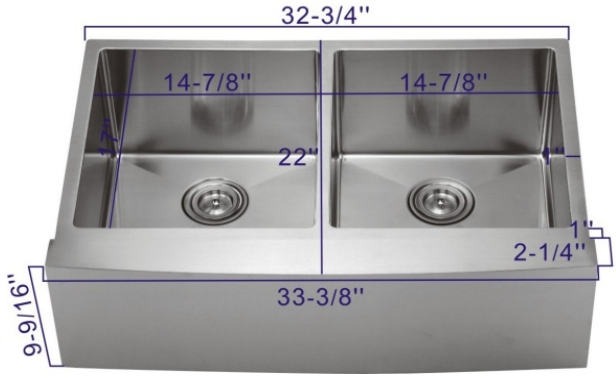

MODEL AR332255 $420

R0 50/50 Bowl Farmhouse Sink
(Straight Corners)
SUS304 18 Ga (1.2mm) 19.56KG
Mute Anti-Condensation
Seamless Connection
Out Size: 33" x 22" x 10"
Bowl Size: 14 7/8" x 17" x 10"

1213 US Route 302-Berlin
Barre, VT 05641
(802)223-5583 (800)479-3636
Fax: (802)229-6130
info@builderspecialties.com
www.builderspecialties.com

STOCK STAINLESS UNDERMOUNT SINKS

MODEL 8153AL $170

70/30 Large Small Combination
SUS304 Stainless
Thickness 18 Ga (1.2 mm)
Out Size: 31 1/4" x 20 1/2"
Bowl Sizes: 18" x 18 3/4" x 9"
and 10 3/8" x 16" x 7"

MODEL 8247A $170

50/50 Double Bowl Sink
SUS304 Stainless
Thickness 18 Ga (1.2 mm)
Out Size: 32 1/4" x 18 1/2" x 9"
Bowl Sizes: 14 5/8" x 16 1/2" x 9"

MODEL 8047A $170

Wide Single Bowl Sink
SUS304 Stainless
Thickness 18 Ga (1.2 mm)
Out Size: 31 5/8" x 18 3/8"
Bowl Size: 29 1/2" x 16" x 9"

MODEL 5945A $140

Standard Single Bowl Sink
SUS304 Stainless
Thickness 18 Ga (1.2 mm)
Out Size: 23 1/4" x 17 3/4" x 9"
Bowl Size: 21 1/4" x 15 3/4" x 9"

1213 US Route 302-Berlin
Barre, VT 05641
(802)223-5583 (800)479-3636
Fax: (802)229-6130
info@builderspecialties.com
www.builderspecialties.com

STOCK STAINLESS DROP IN SINKS

MODEL 8456A $100

Drop In Double Bowl Sink
SUS304 Stainless
Thickness 18 Ga (1.2 mm)
Out Size: 33" x 22"
Bowl Size: 16 1/2" x 14 1/2" x 8" (2)

MODEL 6356A $80

Drop In Single Bowl Sink
SUS304 Stainless
Thickness 18 Ga (1.2 mm)
Out Size: 25" x 22"
Bowl Size: 21" x 16" x 8"

MODEL 5643A $60

Drop In Bar Sink
SUS304 Stainless
Thickness 18 Ga (1.2 mm)
Out Size: 17" x 22"
Bowl Size: 14" x 16" x 7 1/2"

1213 US Route 302-Berlin
Barre, VT 05641
(802)223-5583 (800)479-3636
Fax: (802)229-6130
info@builderspecialties.com
www.builderspecialties.com

STOCK KITCHEN FAUCETS

MODEL K110-BN Brushed Nickel $190
MODEL K110-ORB Oil Rub Bronze $200

Single Handle Pulldown Faucet
Single Hole Installation
16" High 11" Long Swivel Spout
Stream and Spray Modes
60" Quick Connect Sprayer Hose
Premium Grade Ceramic Disc Cartridge

MODEL KSK8238WS-BN $150

Two Handle faucet with Side Spray
4 Hole Installation
13" High 9" Long Swivel Spout
1/2" Connection
1/4 Turn Ceramic Disc Cartridge
Brushed Nickel Finish

MODEL K104-BN $150

Single Handle Pullout Spray Faucet
Single Hole Installation
8" High 10" Long Swivel Spout
Stream and Spray Modes
60" Quick Connect Sprayer Hose
Premium Grade Ceramic Disc Cartridge
Brushed Nickel Finish

1213 US Route 302-Berlin
Barre, VT 05641
(802)223-5583 (800)479-3636
Fax: (802)229-6130
info@builderspecialties.com
www.builderspecialties.com

STOCK BATHROOM SINKS/CULTURED MARBLE TOPS /TOILET

Item PVS-A32-W $80

Domain Industries Undermount Sink
Available in White or Bisque
17 1/16" x 14 1/16" x 5 11/16" D

Rynone Cultured Marble Top

Cultured Marble Top, Recessed Oval, 4" Center
Available in White
Available Sizes:

19x17	**$120**
25x19	**$170**
25x22	**$180**
31x22	**$200**
37x22	**$230**

1213 US Route 302-Berlin
Barre, VT 05641
(802)223-5583 (800)479-3636
Fax: (802)229-6130
info@builderspecialties.com
www.builderspecialties.com

STOCK BATH FAUCETS

MODEL B109-BN $80

Single Handle Lavatory Faucet
4" Center, 3 Hole Installation
Matching Finish Pop-Up Included
Premium Grade Ceramic Disc Cartridge
Brushed Nickel Finish

MODEL B207-ORB Oil Rub Bronze $160

*Current Inventory Only

Wide Spread Lavatory Faucet
6" - 10", 3 Hole Installation
4" High 5" Long Swivel Spout
Matching Finish Pop-Up Included Premium Grade Ceramic Disc Cartridge Oil Rubbed Bronze Finish

MODEL T-101-BN $150

Single Control Tub & Shower Faucet
Pressure Balance Ceramic Disc Cartridge
Brass Shower Arm
Multi Function Shower Head
Can be used as Shower Only Faucet
Brushed Nickel Finish

1213 US Route 302-Berlin
Barre, VT 05641
(802)223-5583 (800)479-3636
Fax: (802)229-6130
info@builderspecialties.com
www.builderspecialties.com

STOCK ELECTRIC RANGES

Item JBS160DMWW Electric **$679**
Item JGBS10DEMWW Gas **$679**

GE Range (Gas limited to stock)
Gas Burners or Coil Burners
Available in White or Black
Dimensions: 47H x 30W x 29D

Item RAS200MWW **$819**

Hotpoint Appliance Range
Electric Coil Burners
Available in White Dimensions:
41.875H x 19.75W x 24.625D

Item 413001 **$150**
Item 413023

Broan Range Hood
Available in White or Black
Dimensions: 6H x 30W x 17.5D

1213 US Route 302-Berlin
Barre, VT 05641
(802)223-5583 (800)479-3636
Fax: (802)229-6130
info@builderspecialties.com
www.builderspecialties.com

STOCK ELECTRIC RANGES. MICROWAVES, DISHWASHERS

Item GRF400SVBB **$699**
Item GRF400SVWW **$699**

GE Range
Glass Top
Available in White and Black
Dimensions: 47 1/4H x 30W x 27 7/8D

Item JVM3160DFBB **$240**
Item JVM3160DFWW **$240**
Item JVM3160RFSS **$250**

GE Microwave
Over the Range
Available in Black, White, or SS
Dimensions: 16 1/8H x 29 7/8W x 15 9/16D

Item GDF450PSRSS **$509**
GDF450PGRBB/PGZBB **$439**
Item GDF450PGRWW **$439**

GE Dishwasher
Front Controls
Available in SS or White or Black
Dimensions: 33 3/8H x 23 3/4W x 24D

1213 US Route 302-Berlin
Barre, VT 05641
(802)223-5583 (800)479-3636
Fax: (802)229-6130
info@builderspecialties.com
www.builderspecialties.com

STOCK REFRIGERATORS

Item GTS18HGNRWW **$699**
Item GTS18HGNRBB **$699**

GE Refrigerator/Freezer
Freezer Top
Refrigerator Bottom Available
in White or Black Dimensions:
67 3/8H x 28 1/4W x 32 3/8D

Item GTS16DTNRWW **$695**

GE Refrigerator/Freezer
Freezer Top Refrigerator
Bottom Available in White
Dimensions:
62 1/8H x 28 1/4W x 32 3/8D